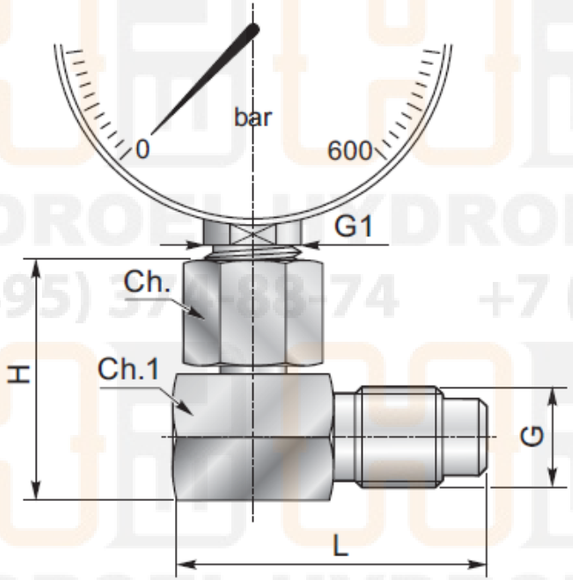

G	G1	H	L	Ch	Ch 1	PN [bar]	Codice/*Ref.*
Porta manometro orientabile 90° / *Swivel pressure gauge connection 90° angle*							
M 16x2	ISO 228 G 1/4"	36	42	19	19	630	**21140000**
M 16x2	ISO 228 G 1/2"	43	42	27	19	630	**21120000**
M 16x1.5	ISO 228 G 1/4"	36	42	19	19	630	**21141500**
M 16x1.5	ISO 228 G 1/2"	43	42	27	19	630	**21121500**

N.B. : passaggio libero senza valvola / *Note: without check valve*

Opzioni/*Options* **S**